Santasalo

David Brown Santasalo

Cement
Chemicals
Defence
Fibre, paper & tissue
Food & beverage
Marine & port operations
Metals
Mining & minerals
Oil & gas
Panelboard
Power generation
Rail
Rubber
Sugar
Water & wastewater

Sugar Cane Processing

Optimised power transmission solutions for the sugar processing industry

Efficient and reliable solutions for the entire sugar production process

Proven planetary technology geared for the sugar industry

Working to optimise sugar´s natural growing cycle, processing plants operate at maximum capacity during harvest time. This, alongside the industry's high energy consumption during seasonal production requires successful drivetrains to deliver the best energy efficiency, supreme operational safety, high reliability and global service support.

Manufactured to meet the challenges of wet environments, David Brown Santasalo's planetary gear systems deliver high power capacity as well as incorporate approved sealing technology to prevent leaks and ensure constant and reliable performance. From newly designed gear systems for new processing plants right through to service, repair and modernisation of existing facilities, as a leading provider of industrial gear systems for process industries David Brown Santasalo delivers planetary technology that has been proven successful time and time again.

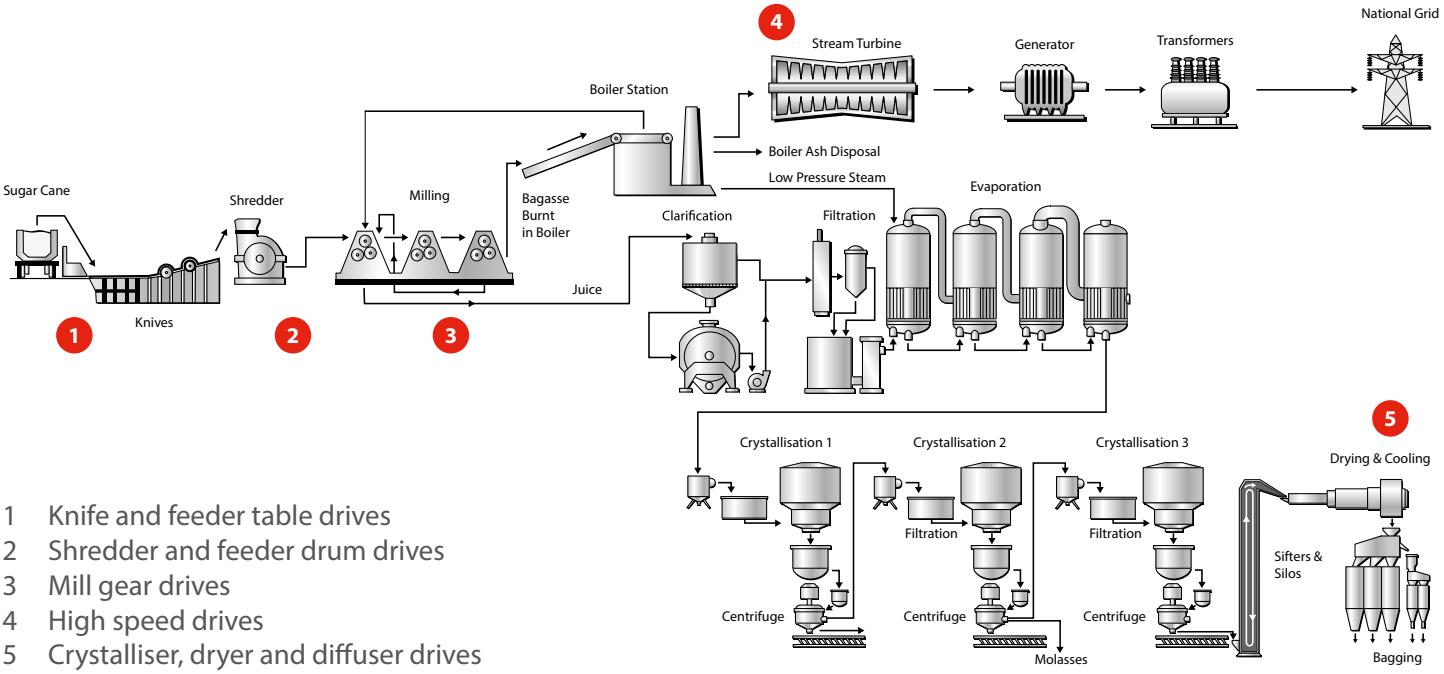

1 Knife and feeder table drives
2 Shredder and feeder drum drives
3 Mill gear drives
4 High speed drives
5 Crystalliser, dryer and diffuser drives

Optimised solutions for sugar cane processing

Our Quatro+ modular range of planetary gear systems allows you to choose the correct drivetrain for your application, each based on the required speed and torque range as well as the space available and ambient conditions.

Cane carrier

- Coaxial Quatro+ planetary gear unit
- Foot mounted
- Hollow shaft output with shrink disc
- Typical 160:1 ratio
- Output torque up to 450,000Nm

Cane shredder

- Coaxial Quatro+ planetary gear units
- Shaft mounted
- Double side linked torque arm
- Splined output shaft
- Motor support
- Belt drive
- Ratio up to 180:1
- Output torque up to 450,000Nm

Pressure feeder

- Coaxial Quatro+ planetary gear units
- Shaft mounted
- Single side torque arm
- Hollow shaft with shrink disc
- Oil circualtion system
- Ratio up to 300:1
- Output torque up to 800,000Nm

Milling train

- 3 stage bevel-helical planetary gear unit or coaxial planetary gear unit option from our Quatro+ range
- Single site torque arm
- Shaft mounted
- Hollow shaft output with shrink disc
- Oil circulation system
- Ratio up to 3,000:1
- Output torque up to 1,400,000Nm

Cost-effective production means saving energy, using resources more effectively and reacting to market trends more flexibly

Drive trains with optimised tooth geometry, compact design and highest production quality

Diffuser

- 4 stage bevel helical Quatro+ planetary gear unit
- Double site torque arm with torsion shaft support or single site torque arm
- Hollow shaft output with shrink disc
- Ratio up to 4,500:1
- Output torque up to 3,000,000Nm
- Split torque drives available for drop in replacement

Kiln drive

- Segmented girth gear, pinion and helical or planetary gear unit
- Diameter up to 14 meters
- Gear system with optional auxiliary drive for easy maintenance
- Ratio up to 390:1
- Output torque up to 20,000,000Nm

Crystalliser

- Four stage coaxial or bevel helical Quatro+ planetary gear unit
- Vertical mounting position
- Shaft mounted
- Hollow shaft with shrink disc
- Oil compensating tank
- Up to 4,500:1 ratio
- Output torque up to 1,400,000Nm

Sugar cane processing at its best with Quatro+ ECO

Our new Quatro+ ECO range has been optimsed specifically to sugar industry requirements. Now with a reduced outer diameter, Quatro+ ECO delivers high performance in a lighter weight design.

Benefits

- Increased bearing load capacity
- Extended bearing life time
- Highest power density
- Increased transmittable torque
- Optimised ratio from torque to weight

Key benefits of Quatro+ ECO

- Reduced life cycle costs
- Lower investment costs
- High energy efficiency Improved engagement rollers and better disassembling roller shells due to reduced outer diameter gears
- Short, compact, weight-reduced drivetrains

Technical data

Quatro+ ECO sizes	Nom. output torque (kNm)	Stages	Ratio	Shaft mounted Weight (kg)	Foot mounted Weight (kg)
0113	722	2 - 3	20 - 360	4.300 - 4.600	5.450 - 5.750
0123	938	2 - 3	20 - 360	5.200 - 5.500	6.450 - 6.750
0133	1,014	2 - 3	20 - 360	5.800 - 6.100	7.320 - 7.680
0143	1,237	2 - 3	20 - 360	6.600 - 6.900	8.180 - 8.540
0153	1,427	2 - 3	20 - 360	7.800 - 8.100	9.600 - 9.960

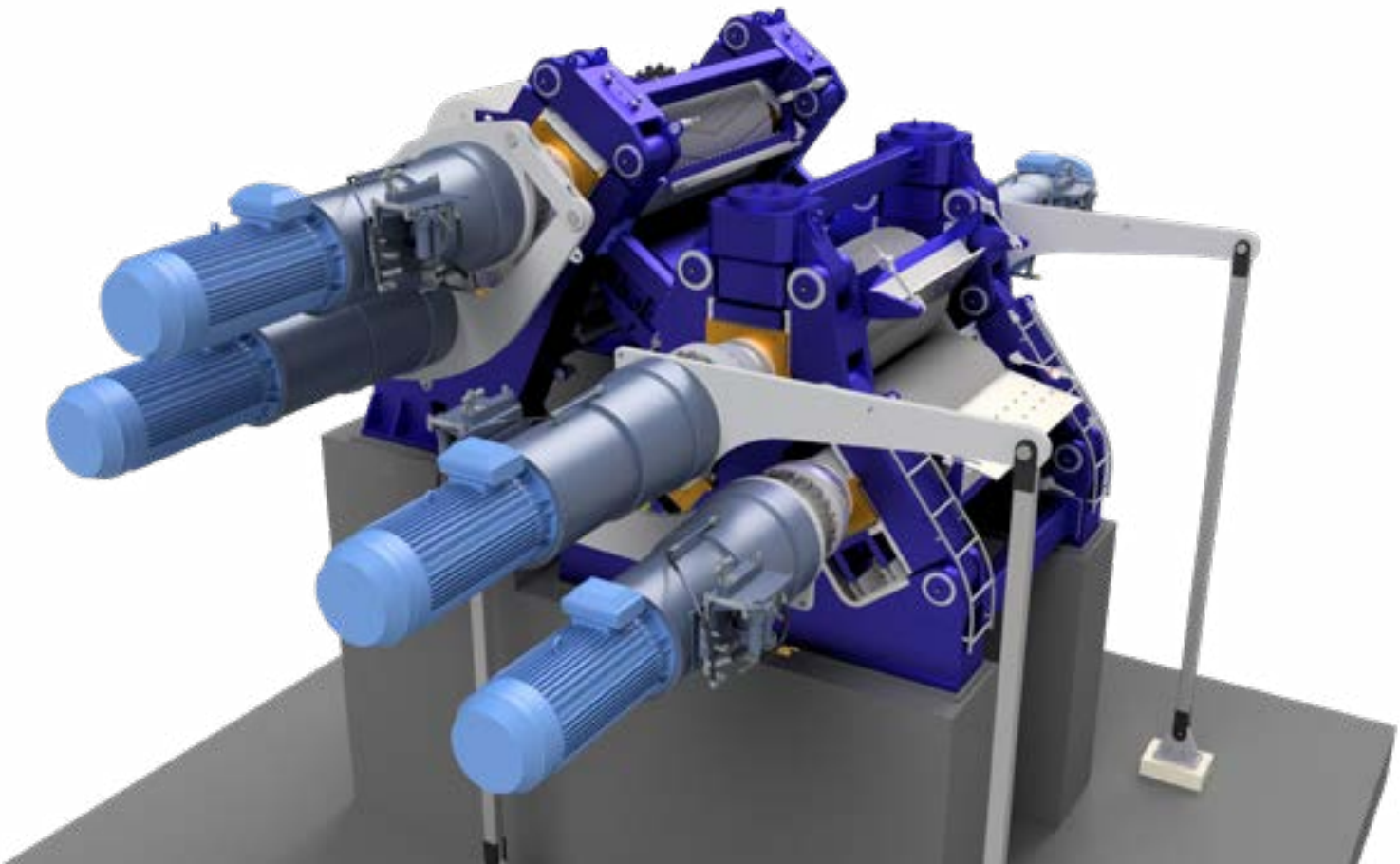

Total efficiency drive train concepts

Open gear 49%

Conventional 69%

Main drive helical design 80%

Pinion less bevel design 94%

Pinion less coaxial design 96%

47%

47% reduced energy losses in comparison to an open gear concept with steam turbine

Sample

The daily capacity for a typical modern sugar plant should be expected with more than 22,000 tons sugar cane. Nominal installed power for the installed 5 mills: 9,375 kW

Energy efforts per day for 22 tons sugar cane:	**9,375 kW x 24h = 225,000 kWh / 22,000 TCD**
Specific energy effort:	**10.227 kWh/ton sugar cane**
Saving of energy:	**approx 5 kWh / ton sugar cane = 110,000 kWh / day 22,000 TCD**

Typical Accessories

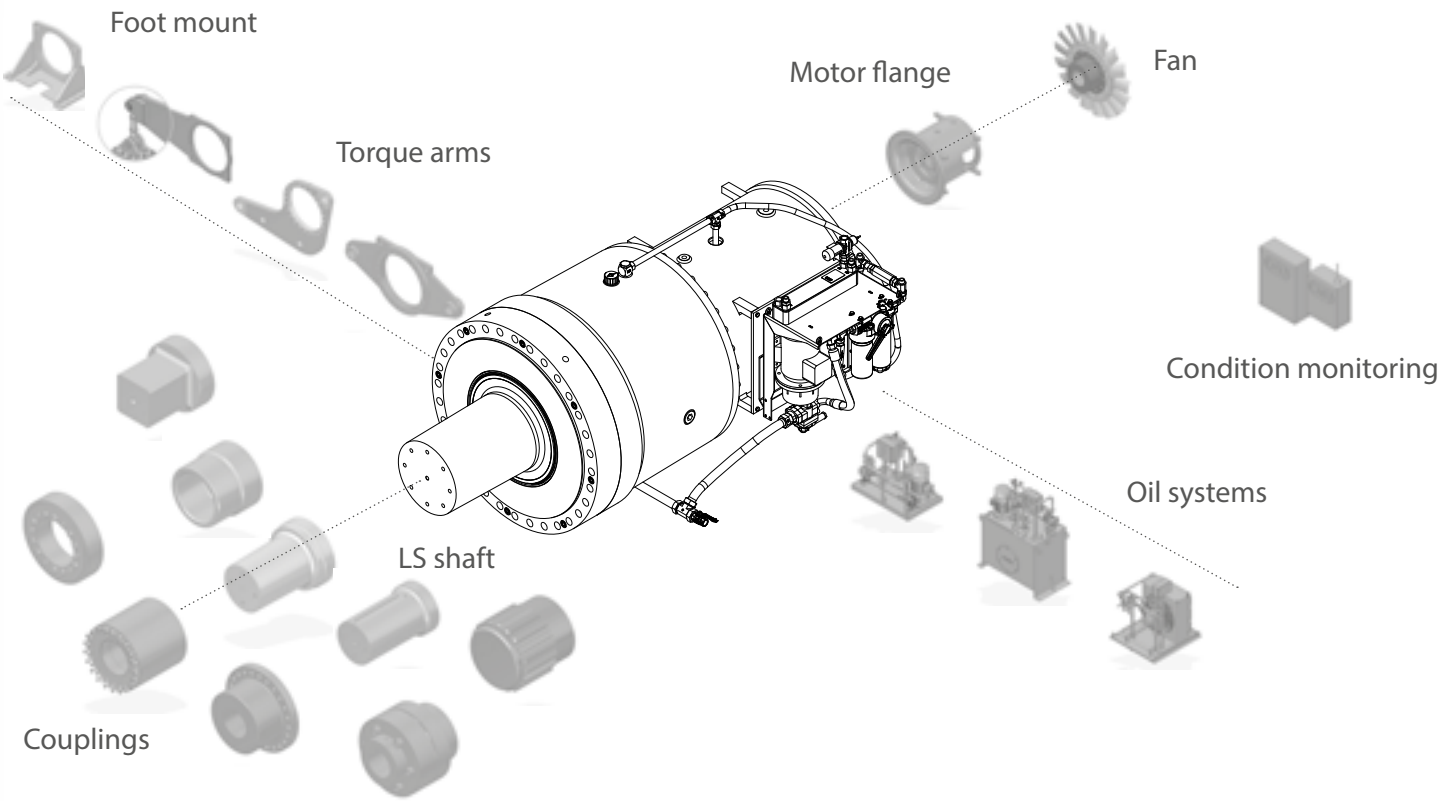

Quatro+ & Quatro+ ECO
2 stage gearbox
Foot mounted

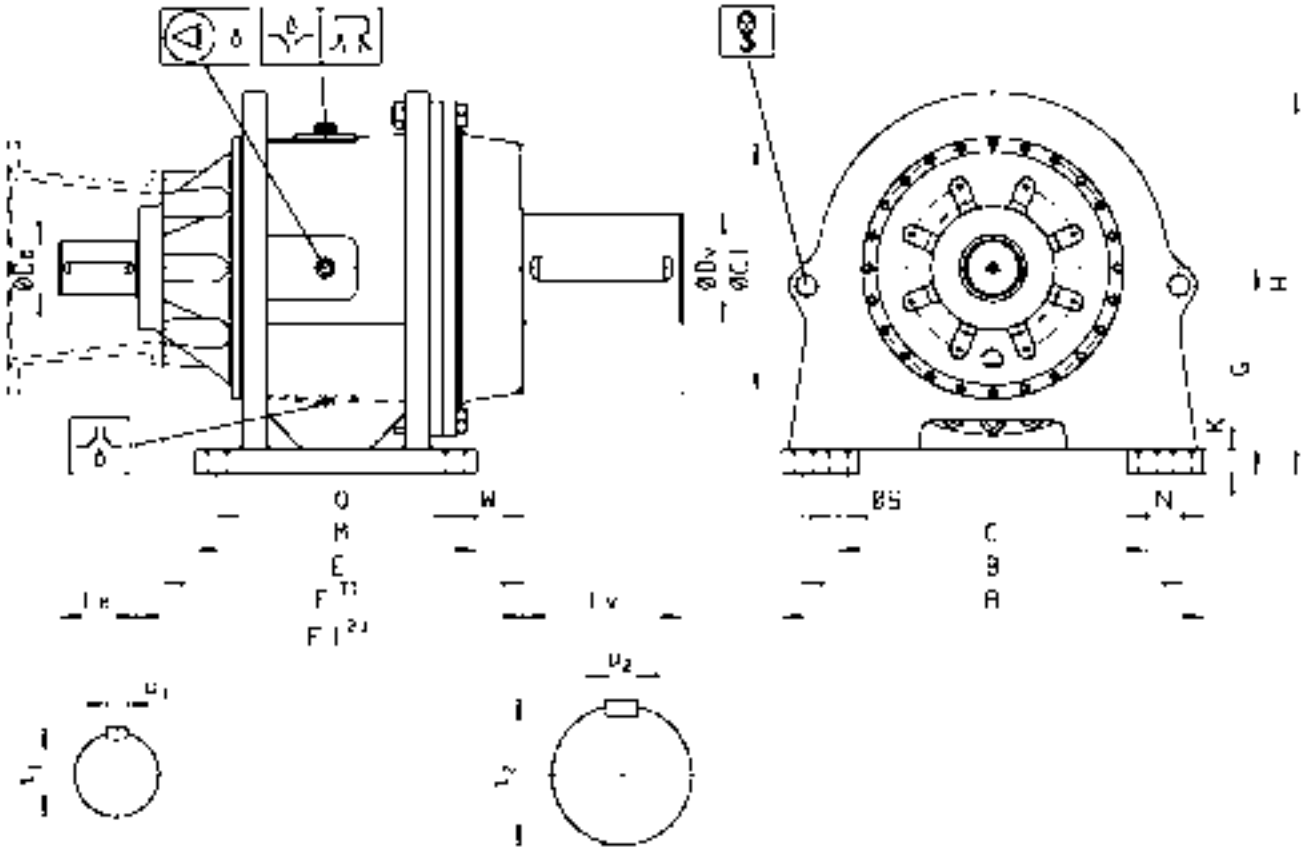

Size	Dimensions in mm																							Mass	Quantity of oil
	A	B	C	C1	E	F	F1	G	H	K	M	N	O	S	W	De	Le	Dv	Lv	u1	t1	u2	t2	kg	l
0013	560	510	410	340	502	513	548	283	525	30	380	100	330	22	85	50k6	110	150m6	220	14h9	54	36h9	158	370	10
0023	630	580	480	373	559	570	605	313	580	35	430	100	380	22	88	60m6	120	160m6	250	18h9	64	40h9	169	520	15
0033	700	640	540	408	614	625	660	343	640	35	460	110	400	26	99	70m6	140	180m6	280	20h9	75	45h9	190	700	20
0043	780	700	570	453	689	700	735	378	705	40	520	140	440	33	134	80m6	150	200m6	350	22h9	85	45h9	210	980	25
0053	820	730	580	490	729	740	780	393	745	40	550	160	460	39	143	90m6	160	220m6	400	25h9	95	50h9	231	1140	32
0063	950	860	710	574	829	840	880	480	885	60	600	160	510	39	147	100m6	180	250m6	400	28h9	106	56h9	262	1770	55
0073	1050	950	770	633	884	895	935	520	965	60	650	190	550	45	160	120m6	200	260m6	400	32h9	127	56h9	272	2370	65
0083	1150	1050	870	685	991	1005	1055	570	1055	70	720	190	620	45	168	140m6	220	300m6	450	36h9	148	70h9	314	3100	100
0093	1200	1080	880	710	1086	1100	1150	585	1085	70	800	220	680	52	194	150m6	220	340m6	550	36h9	158	80h9	355	3580	115
0103	1300	1180	980	781	1141	1155	1215	645	1195	80	830	220	710	52	201	160m6	240	360m6	600	40h9	169	80h9	375	3600	145
0113	1380	1240	1000	827	1206	1220	1280	680	1255	80	890	260	750	60	220	160m6	240	380m6	650	40h9	169	80h9	395	5450	175
0123	1430	1290	1050	903	1296	1310	1380	715	1315	90	950	260	810	60	226	180m6	350	420m6	650	45h9	190	90h9	437	6450	220
0133	1500	1340	1070	937	1326	1340	1410	755	1395	90	1020	290	860	70	221	180m6	350	450m6	700	45h9	190	100h9	469	7320	250
0143	1620	1460	1190	965	1436	1450	1520	830	1535	100	1050	290	890	70	236	200m6	350	480m6	750	45h9	210	100h9	499	8180	270
0153	1690	1500	1200	1019	1466	1480	1550	865	1605	100	1150	340	960	78	218	200m6	350	500m6	800	45h9	210	100h9	519	9600	330

1) F = Without cooling fan 2) F1 = with cooling fan
Optimum Quatro+ ECO design available in highlighted sizes

Quatro+ & Quatro+ ECO
2 stage gearbox
Flange mounted

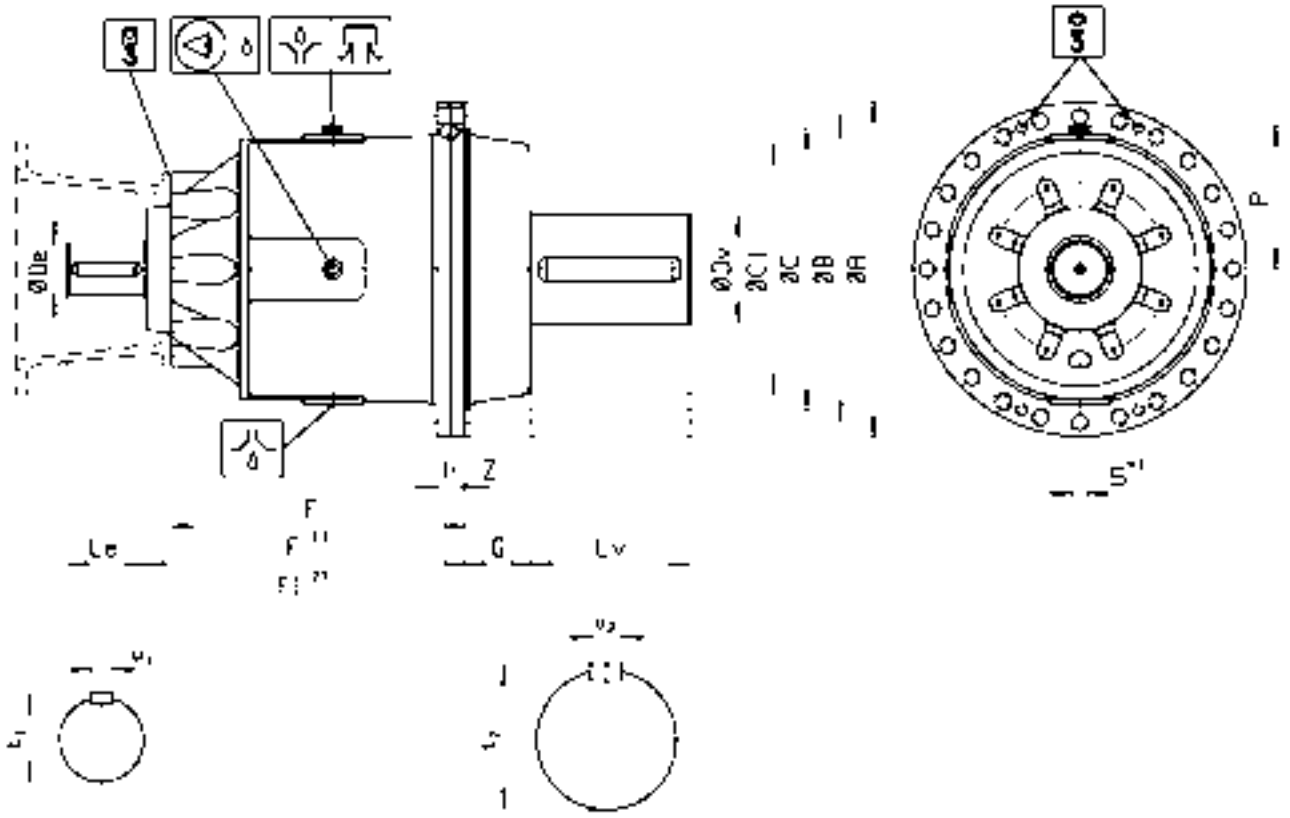

Size	Dimensions in mm																				Mass	Quantity of oil
	A	B	C	C1	E	F	F1	G	H	P	S	Z	De	Le	Dv	Lv	u1	t1	u2	t2	kg	l
0013	450	410	370f8	340	424	435	470	78	38	205	22	8	50k6	110	150m6	220	14h9	54	36h9	158	280	10
0023	500	460	410f8	373	474	485	520	85	44	230	22	8	60m6	120	160m6	250	18h9	64	40h9	169	400	15
0033	560	510	460f8	408	524	535	570	90	46	260	26	8	70m6	140	180m6	280	20h9	75	45h9	190	540	20
0043	620	560	480f8	453	559	570	605	130	60	280	33	8	80m6	150	200m6	350	22h9	85	45h9	210	730	25
0053	650	590	530f8	490	589	600	640	140	60	300	33	8	90m6	160	220m6	400	25h9	95	50h9	231	860	32
0063	760	690	610f8	574	689	700	740	140	70	340	39	8	100m6	180	250m6	400	28h9	106	56h9	262	1350	55
0073	840	770	690f8	633	739	750	790	145	80	385	39	12	120m6	200	260m6	400	32h9	127	56h9	272	1800	65
0083	920	840	750f8	685	831	845	895	160	80	420	45	12	140m6	220	300m6	450	36h9	148	70h9	314	2400	100
0093	950	870	800f8	710	896	910	960	190	80	440	45	12	150m6	220	340m6	550	36h9	158	80h9	355	2800	115
0103	1050	960	850f8	781	946	960	1020	195	90	480	45	12	160m6	240	360m6	600	40h9	169	80h9	375	3600	145
0113	1100	1010	900f8	827	996	1010	1070	210	90	510	45	12	160m6	240	380m6	650	40h9	169	80h9	395	4300	175
0123	1150	1070	970f8	903	1076	1090	1160	220	90	540	45	16	180m6	350	420m6	650	45h9	190	90h9	437	5200	220
0133	1210	1120	1010f8	937	1106	1120	1190	220	100	560	45	16	180m6	350	450m6	700	45h9	190	100h9	469	5800	250
0143	1340	1250	1150f8	965	1203	1220	1290	230	100	580	45	16	200m6	350	480m6	750	45h9	210	100h9	499	6600	270
0153	1410	1320	1200f8	1019	1231	1245	1315	235	100	600	45	16	200m6	350	500m6	800	45h9	210	100h9	519	7800	330

1) F = Without cooling fan 2) F1 = with cooling fan
Optimum Quatro+ ECO design available in highlighted sizes

Quatro+ & Quatro+ ECO
3 stage gearbox
Flange mounted

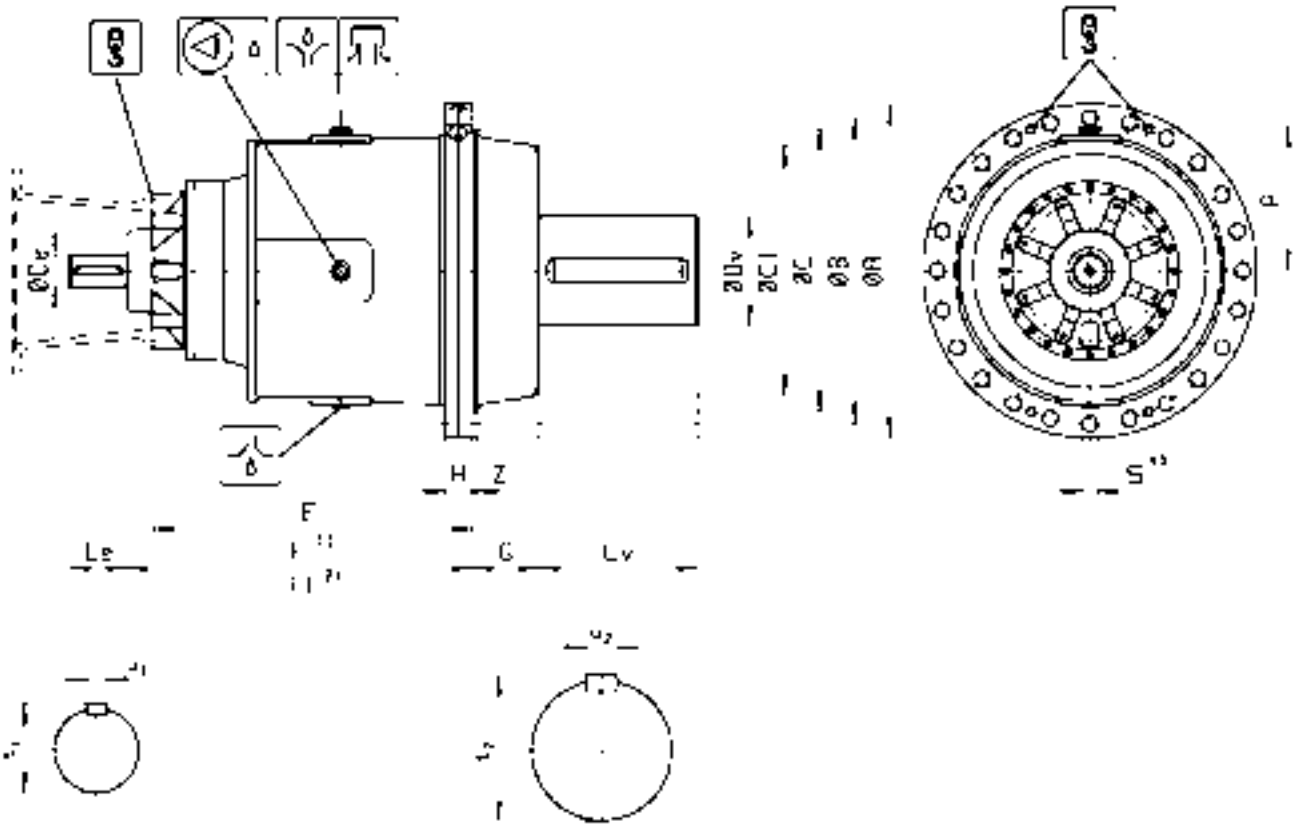

Size	Dimensions in mm																				Mass	Quantity of oil
	A	B	C	C1	E	F	F1	G	H	P	S	Z	De	Le	Dv	Lv	u1	t1	u2	t2	kg	l
0013	450	410	370f8	340	509	520	555	78	38	205	22	8	32k6	58	150m6	220	10h9	35	36h9	158	310	14
0023	500	460	410f8	373	544	555	590	85	44	230	22	8	32k6	58	160m6	250	10h9	35	40h9	169	430	19
0033	560	510	460f8	408	574	585	620	90	46	260	26	8	32k6	58	180m6	280	10h9	35	45h9	190	570	25
0043	620	560	480f8	453	704	715	750	130	60	280	33	8	70m6	140	200m6	350	20h9	75	45h9	210	800	35
0053	650	590	530f8	490	724	735	770	140	60	300	33	8	70m6	140	220m6	400	20h9	75	50h9	231	930	40
0063	760	690	610f8	574	774	785	820	140	70	340	39	8	70m6	140	250m6	400	20h9	75	56h9	262	1420	65
0073	840	770	690f8	633	869	880	920	145	80	385	39	12	90m6	160	260m6	400	25h9	95	56h9	272	1930	80
0083	920	840	750f8	685	924	935	975	160	80	420	45	12	90m6	160	300m6	450	25h9	95	70h9	314	2530	115
0093	950	870	800f8	710	974	985	1025	190	80	440	45	12	90m6	160	340m6	550	25h9	95	80h9	355	2930	130
0103	1050	960	850f8	781	1099	1110	1150	195	90	480	45	12	120m6	200	360m6	600	32h9	127	80h9	375	3900	180
0113	1100	1010	900f8	827	1149	1160	1200	210	90	510	45	12	120m6	200	380m6	650	32h9	127	80h9	395	4600	210
0123	1150	1070	970f8	903	1199	1210	1250	220	90	540	45	16	120m6	200	420m6	650	32h9	127	90h9	437	5500	255
0133	1210	1120	1010f8	937	1281	1295	1345	220	100	560	45	16	140m6	220	450m6	700	36h9	148	100h9	469	6160	300
0143	1340	1250	1150f8	965	1321	1335	1385	230	100	580	45	16	140m6	220	480m6	750	36h9	148	100h9	499	6960	320
0153	1410	1320	1200f8	1019	1346	1360	1410	235	100	600	45	16	140m6	220	500m6	800	36h9	148	100h9	519	8160	380

1) F = Without cooling fan 2) F1 = with cooling fan
Optimum Quatro+ ECO design available in highlighted sizes

Quatro+ & Quatro+ ECO
3 stage gearbox
Foot mounted

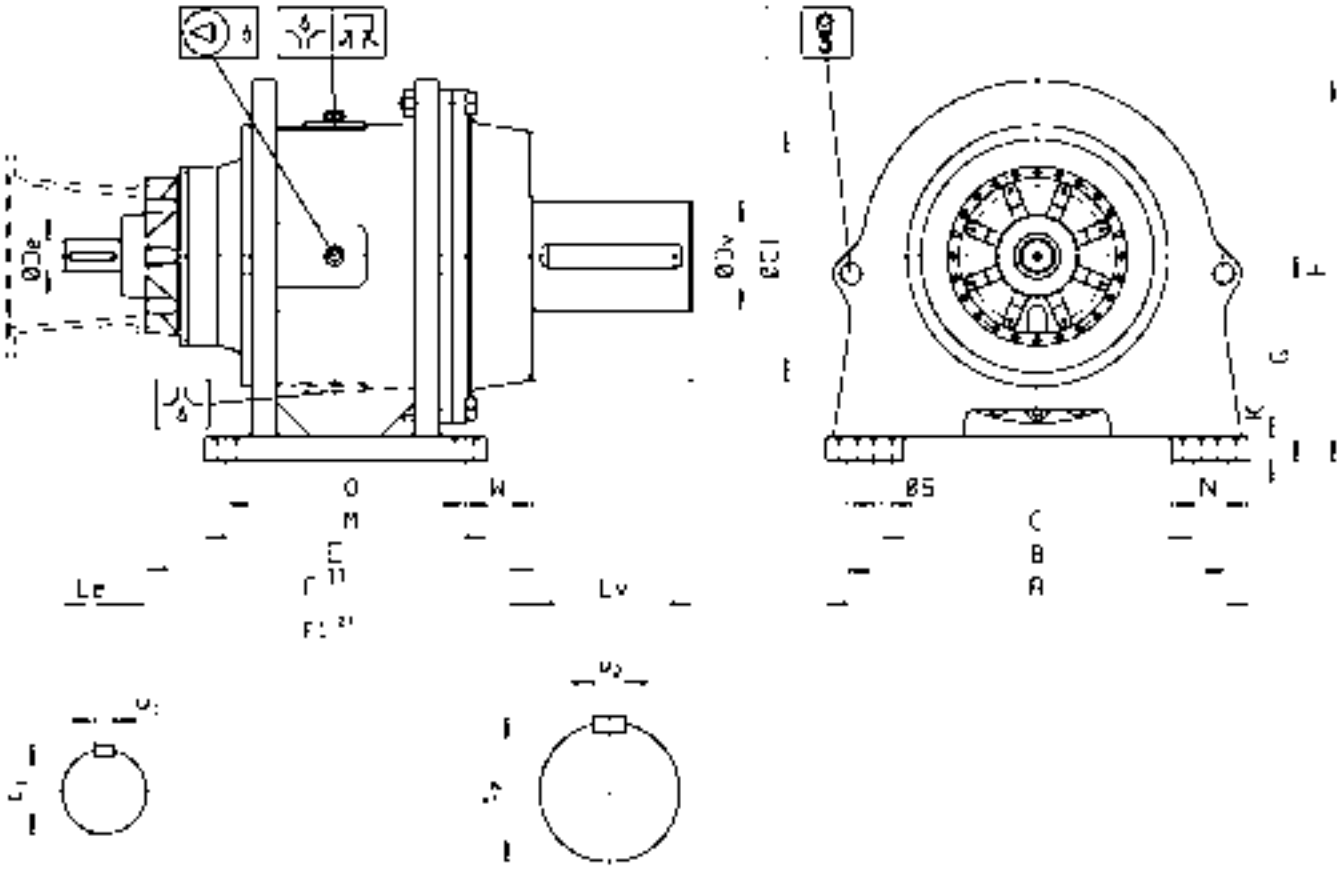

Size	Dimensions in mm																							Mass	Quantity of oil
	A	B	C	C1	E	F	F1	G	H	K	M	N	O	S	W	De	Le	Dv	Lv	u1	t1	u2	t2	kg	l
0013	560	510	410	340	587	598	633	283	525	30	380	100	330	22	85	32k6	58	150m6	220	10h9	35	36h9	158	400	14
0023	630	580	480	373	629	640	675	313	580	35	430	100	380	22	88	32k6	58	160m6	250	10h9	35	40h9	169	550	19
0033	700	640	540	408	664	675	710	343	640	35	460	110	400	26	99	32k6	58	180m6	280	10h9	35	45h9	190	730	25
0043	780	700	570	453	834	845	880	378	705	40	520	140	440	33	134	70m6	140	200m6	350	20h9	75	45h9	210	1050	35
0053	820	730	580	490	864	875	910	393	745	40	550	160	460	39	143	70m6	140	220m6	400	20h9	75	50h9	231	1210	40
0063	950	860	710	574	914	925	960	480	885	60	600	160	510	39	147	70m6	140	250m6	400	20h9	75	56h9	262	1840	65
0073	1050	950	770	633	1014	1025	1065	520	965	60	650	190	550	45	160	90m6	160	260m6	400	25h9	95	56h9	272	2500	80
0083	1150	1050	870	685	1084	1095	1135	570	1055	70	720	190	620	45	168	90m6	160	300m6	450	25h9	95	70h9	314	3225	115
0093	1200	1080	880	710	1164	1175	1215	585	1085	70	800	220	680	52	194	90m6	160	340m6	550	25h9	95	80h9	355	3710	130
0103	1300	1180	980	781	1294	1305	1345	645	1195	80	830	220	710	52	201	120m6	200	360m6	600	32h9	127	80h9	375	3900	180
0113	1380	1240	1000	827	1359	1370	1410	680	1255	80	890	260	750	60	220	120m6	200	380m6	650	32h9	127	80h9	395	5750	210
0123	1430	1290	1050	903	1419	1430	1470	715	1315	90	950	260	810	60	226	120m6	200	420m6	650	32h9	127	90h9	437	6740	255
0133	1500	1340	1070	937	1501	1515	1565	755	1395	90	1020	290	860	70	221	140m6	220	450m6	700	36h9	148	100h9	469	7680	300
0143	1620	1460	1190	965	1551	1565	1615	830	1535	100	1050	290	890	70	236	140m6	220	480m6	750	36h9	148	100h9	499	8540	320
0153	1690	1500	1200	1019	1581	1595	1645	865	1605	100	1150	340	960	78	218	140m6	220	500m6	800	36h9	148	100h9	519	9960	380

1) F = Without cooling fan 2) F1 = with cooling fan
Optimum Quatro+ ECO design available in highlighted sizes

Specialist gearing designs for sugar industry applications
Available in low speed shaft designs

Quatro+ / Quatro+ ECO
Conical output shaft

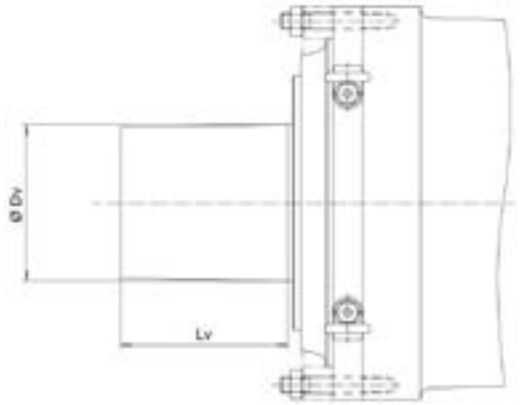

Quatro+	Dimensions	
Size	Dv	Lv
0013	On request	
0023		
0033		
0043		
0053		
0063		
0073		
0083		
0093		
0103		
0113	380	440
0123	420	450
0133	450	470
0143	480	540
0153	500	500

Quatro+ / Quatro+ ECO
Cylindrical output shaft

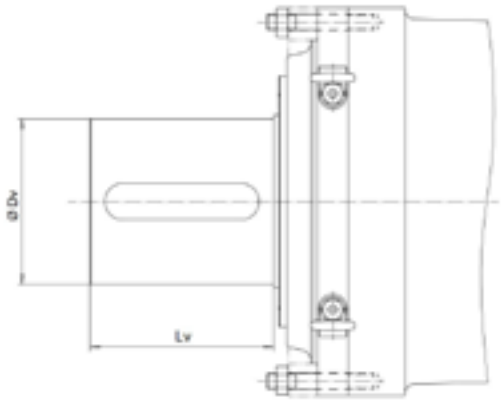

Quatro+	Dimensions	
Size	Dv	Lv
0013	On request	
0023		
0033		
0043		
0053		
0063		
0073		
0083		
0093		
0103		
0113	380 m6	380
0123	420 m6	490
0133	450 m6	500
0143	480 m6	540
0153	500 m6	570

Quatro+ / Quatro+ ECO
Square output shaft

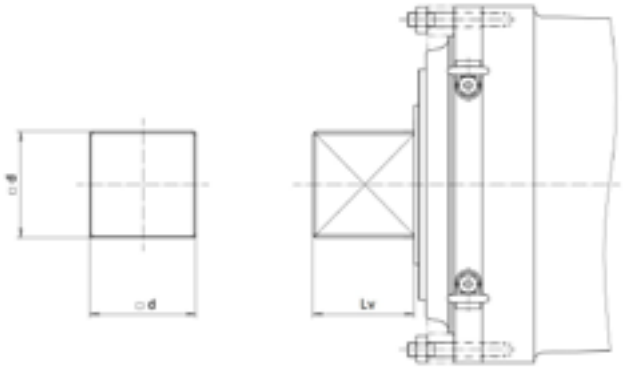

Quatro+	Dimensions	
Size	d	Lv
0013	On request	
0023		
0033		
0043		
0053		
0063		
0073		
0083		
0093		
0103		
0113	265	150
0123	295	160
0133	315	300
0143	335	330
0153	350	350

Quatro+ / Quatro+ ECO
Output flange

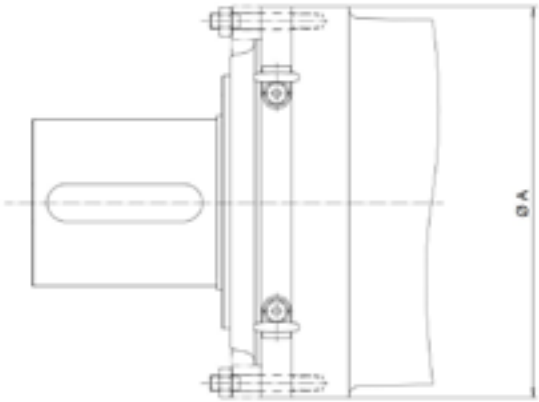

Quatro+	Outer Diameter A	
Size	Quatro+	Quatro+ ECO
0013	450	On request
0023	500	
0033	560	
0043	620	
0053	650	
0063	760	
0073	840	
0083	920	
0093	950	
0103	1050	
0113	1100	985
0123	1150	1035
0133	1210	1055
0143	1340	1175
0153	1410	1270

Expert service regardless of the brand

With almost three centuries of combined gearbox design and manufacturing expertise, David Brown Santasalo has an unparalleled insight into the environments in which gearboxes operate and how different types and applications function.

Our knowledge, expertise and experience in the industry makes us the service provider of choice for many of the world's leading industrial companies. Our global service network enables us to support our customers with our technical expertise wherever you are in the world, in the shortest possible time.

With David Brown Santasalo service support, the entire lifecycle of your gear system is taken into consideration.

Manufacturing & service
Australia
Canada
China
Finland
India
South Africa
UK

Service centers
Australia
Canada
Chile
China
Finland
Germany
Indonesia
Peru
Philippines
Russia
Sweden
USA

Sales
Finland
France
Malaysia
Russia
Sweden
Turkey

Our gear systems deliver an efficiency of up to 98%, meaning your power consumption is reduced.

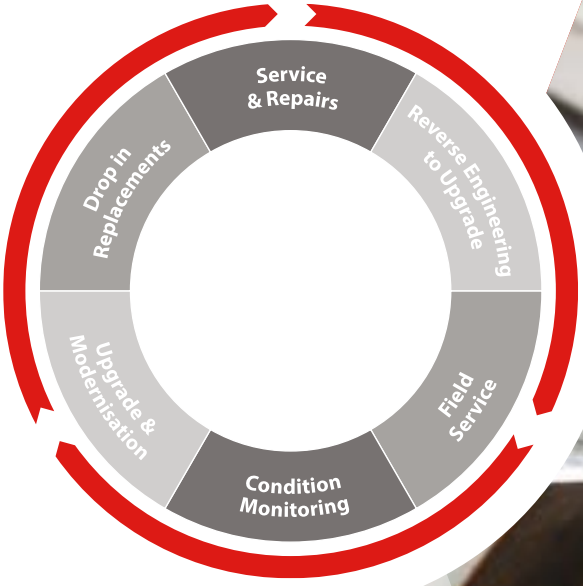

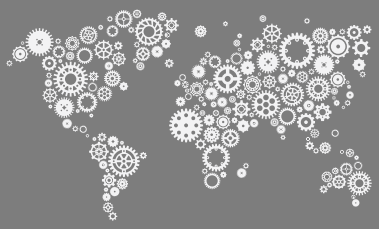

Santasalo

David Brown Santasalo

Europe

Finland
Jyväskylä, Hyvinkää & Tornio
T: +358 293 401000
E: finland@dbsantasalo.com

France
Bordeaux
T: +33 547 745 402
E: france@dbsantasalo.com

Germany
Wuppertal
T: +49 202 24 14 0
E: germany@dbsantasalo.com

Russia
Saint-Petersburg, Novokuznetsk
T: +7 812 612 25 30
E: russia@dbsantasalo.com

Sweden
Gothenburg & Gällivare
T: +46 31 710 20 50
E: sweden@dbsantasalo.com

Turkey
Istanbul
T: +90 216 514 80 08
E: turkey@dbsantasalo.com

UK
Huddersfield
T: +44 1484 465500
E: uk@dbsantasalo.com

Americas

Canada
Cambridge, Ontario
T: +1 519 621 6390
E: canada@dbsantasalo.com

Canada
Montreal
T: +1 514 457 7700
E: canada@dbsantasalo.com

Chile
Santiago
T: +56 2 2234 5000
E: chile@dbsantasalo.com

Chile
Antofagasta
T: +56 5 5249 2800
E: chile@dbsantasalo.com

Peru
Arequipa
T: +51 9 7763 7240
E: peru@dbsantasalo.com

USA
Greer, SC & Salt Lake City
T: +1 864 627 1700
E: usa@dbsantasalo.com

Asia Pacific

Australia
Bulli
T: +61 2 4283 0300
E: australia@dbsantasalo.com

Australia
Mackay
T: +61 7 4842 3222
E: australia@dbsantasalo.com

Australia
Perth
T: +61 8 9365 5555
E: australia@dbsantasalo.com

China
Suzhou
T: +86 512 6299 8852
E: suzhou@dbsantasalo.com

China
Tianjin
T: +86 135 1245 2820
E: tianjin@dbsantasalo.com

India
Hosur, Tamil Nadu
T: +91 4344 277 740
E: india@dbsantasalo.com

Indonesia
Surabaya
T: +62 31 8910977
E: indonesia@dbsantasalo.com

Malaysia
Kuala Lumpur
T: +60 (3) 9207 9700
E: malaysia@dbsantasalo.com

Philippines
Subic Bay
T: + 63 047 250 2407
E: philippines@dbsantasalo.com

Africa

South Africa
Benoni
T: +27 11 748 0000
E: salessa@dbsantasalo.com

GearWatch Condition Monitoring:

www.dbsantasalo.com

Revision date: February 2020. The information contained in this catalogue has been obtained through sources deemed reliable but cannot be guaranteed as to its accuracy. Any information of special interest should be obtained through independent verification and consulted with a David Brown Santasalo representative. In the interest of continuous development, David Brown Santasalo reserves the right to alter designs and specifications without prior notice. Your David Brown Santasalo representative should be consulted prior to product selection and use. Terms and conditions apply. Contact your local David Brown Santasalo representative for details and to check eligibility.